BeFREE 22

15.6” Touchcomputer with Intercom and Line Keys

Technical Overview

BeFREE22_TO_2_03.docx
Version 2.03
Apr. 2025

TIPRO

Contents

A. GENERAL INFORMATION 4
A.1 Higlights 4
FEATURES 4
APPLICATIONS 5
A.2 Technical Characteristics 5
ELECTRICAL 5
MECHANICAL 5
ENVIRONMENTAL 6
EMBEDDED COMPUTER 6
DISPLAY 7
TOUCHSCREEN 7
AUDIO SECTION (INTERCOM) 7
MECHANICAL KEYS 8
B. INTEGRAL PARTS AND FUNCTIONALITY 9
B.1 Operator Interface 9
B.2 Touchmonitor 11
B.3 Embedded Computer 11
B.4 Intercom (Audio Section) 11
Microphone Amplifier 13
Left and Right Speaker Amplifier 13
Bar-Graph Displays 14
Incremental Encoders 14
B.5 External Connectors 15
External Digital Inputs 16
External Analog Inputs and Outputs 17
C. OPERATION 18
C.1 Configuring BeFREE 22 18
C.2 Applying BeFREE 22 19
D. OPTIONS 20
D.1 Inclination Mechanism 20
D.2 HID Telephony Interface 20
D.3 Echo-Cancellation Circuitry 21
D.4 Goose-Neck Microphone 21

D.5 Without Line_keys 21
E. ORDERING CODES 22
E.1 BeFREE 22 22
E.2 Inclination Mechanism 23
F. REFERENCES 24
G. NOTICES 25
G.1 Disclaimer 25
G.2 Copyright Notice 25

A. GENERAL INFORMATION

The BeFREE 22 (BF22) is a member of the modular **FREE** (also referred to as FREE/FREE+/BeFREE) product family, integrating a 15.6" touchmonitor, a computer and an intercom device. It is compatible and combinable with all existing **FREE** modules. The touchmonitor comprises a high-brightness, ultra-wide viewing angle TFT LCD and a touchscreen. The computer is based on a main-board with Intel quad-core Celeron processor (**J6412**) and a solid state disk. Thanks to low-power components and the corresponding electronic and thermal design the BeFREE 22 is completely silent and without moving parts.
The Intercom section consists of a goose-neck microphone, illuminated PTT key, stereo loudspeakers, two volume control knobs, two VU-meters and 16 line keys with integrated three-color LED indicators. Its primary audio interface is USB via two independent Audio Codecs, but it is also connected to the analog sound card of the embedded computer as well as to the externally available connectors. This triple interface results in up to eight listening (output) channels and four parallel recording (input) channels. The status of the PTT key is reported via HID Keyboard and/or HID Telephony interface. The same is applicable to the 16 line keys. Operation of the LED indicators inside line keys can be pre-programmed or controlled from the application software using HID API.

A.1 Higlights

FEATURES

- Space-saving integration of a fanless touchcomputer and an intercom
- Wide-screen variant of BeFREE20 with integrated Line Keys
- Modular – combinable with other **FREE** modules into multifunctional terminals
- Low-profile horizontal design
- Silent and reliable - no moving parts, industrial grade components, Ethernet redundancy, redundant internal audio and controller interfaces
- Extensive connectivity (LAN, USB, COM, external display, digital inputs)
- Analog audio connectivity (Line-In, Line-Out, Mic-In, Intercom-In, Intercom-Out)
- Cable management – hidden and secured, but accessible
- Built-in Tipro controller enables:
    - modularity and programmability
    - energy saving modes
    - touchscreen disable/enable control (in case of 5-wire resistive touch)
    - brightness adjustment
    - 22 programmable keys
    - two programmable digital inputs (e.g. for an external PTT switch/pedal)
- Stereo loudspeakers, each rated for 5W (8 W max), with two separate volume control encoders
- Amplifier with 2 x 8W rated output power
- Goose-neck microphone with illuminated PTT key
- 16 mechanical keys (Line Keys) with integrated three-color LED indicators
- Dual three-color bar-graph display
- Five mechanical keys for brightness control, volume adjustment and other functions
- Several LED indicators (power, SSD, microphone, touchscreen ...)
- Optional Inclination Mechanism (VESA 75)

APPLICATIONS

- Operator/dispatcher terminals/consoles for command and control centres in:
  - transport and traffic control (railways, air traffic …)
  - public safety (police, fire brigades, ambulance …)
  - utilities (electricity, gas ...)
  - building/facility management systems (airports, banks, industrial plants …)
- Trading and banking consoles
- Multifunctional control panels

A.2 Technical Characteristics

ELECTRICAL

- **Power supply**: 12V±5% (from an external AC/DC adapter)
- **Power consumption**:

Operating Mode	Typical	Maximal
OFF (power saving)	0.2 W	0.2 W
OFF (standard mode)	4 W	4 W
SLEEP (Windows standby)	4 W	4 W
IDLE	28 W	30 W
ACTIVE	33 W	36 W

Note 1: Values in the table above are temporary approximations of typical consumption, obtained by measurements at the 12V power input of the BeFREE 22 (LCD at full brightness) without any additional Tipro modules and without any other peripherals connected. Terminology for Operating Modes is taken from "ENERGY STAR Program Requirements for Computers: Version 8.0".

- **Internal interface and power** connectors (to provide for modularity):
  - left-hand side Tipro Bus connector: 6-pin Micro-MaTch header (male) at the end of a 6-wire ribbon cable
  - right-hand side Tipro Bus connector: 6-pin Micro-MaTch header (male) at the end of a 6-wire ribbon cable
- **External interface and power connectors** (to provide for external expansions):
  - standard computer interfaces: LAN, USB, COM, Display … (see Chapter B.5 for details)

MECHANICAL

- **Casing**: plastic ABS, black (C15) color with matte black (C25) top part
- **Gross dimensions** (with side-covers): 440x342x112 (WxDxH) [mm]
- **Goose-neck microphone length/height**: 350±50mm
- **Weight**: 6.7 kg (approximately)
- **Protection (sealing) grade**: IP20 (according to EN 60529)

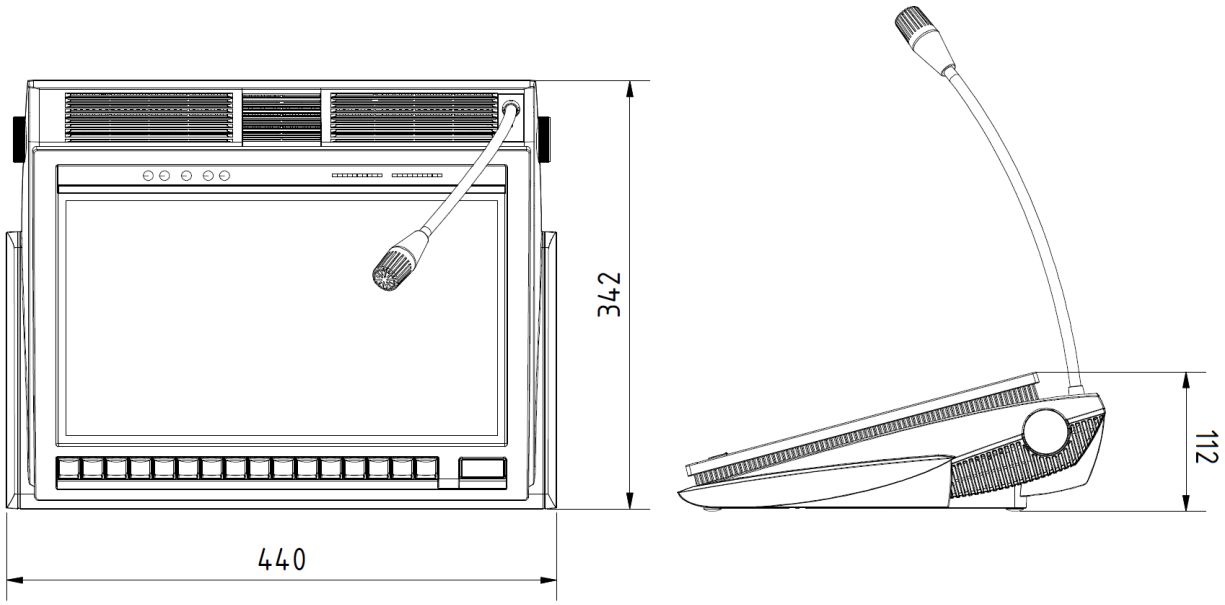

Figure 1 - Physical Dimensions

ENVIRONMENTAL

- Operating ambient temperature range: +5°C to +35°C
- Storage ambient temperature range: -10°C to +50°C
- Relative humidity range: 20% to 80% (non-condensing)

EMBEDDED COMPUTER

Processor (SoC)

- Intel® Celeron® J6412 2.0 GHz (2.60 GHz burst frequency)

Chipset

- Northbridge functionality integrated in the SoC
- Southbridge functionality integrated in the SoC

System Memory

- 8GB DDR4 2666 MHz (16 and 32GB optional)

Video

- Graphic processor integrated in the SoC
- Triple independent display support (built-in, HDMI, DP)
- Resolution external display : up to 4096x2160
    - HDMI2.0 up to 4096 x 2160 x 24bpp @ 60Hz
    - DP1.4a, up to 4096 x 2160 x 36bpp@60Hz

Dual Ethernet:

- 2 x 10/100/1000 Base-TX

Audio

- Analog Line In, Line Out and Mic-In (internally connected to Intercom and/or externally available – see Chapter B.4

Mass Storage

- Type: Solid State Disk
- Technology: Multi-Level Cell (MLC) NAND
- Interface: SATA III - 6Gb/s
- Form factor: M.2
- Capacity: ≥250GB

DISPLAY

- Type: TFT LCD
- Size: 15.6” diagonal
- Aspect ratio: 16:9
- Native resolution: 1920×1080 (HD)
- Luminance/brightness (typical): ≥400 cd/m2
- Contrast ratio (typical): ≥500:1
- Backlight lifetime (typical): ≥50,000 hours

TOUCHSCREEN

- **Technology: 5-wire resistive (ELO)**
    - Positional accuracy: 2.03mm (standard deviation of error)
    - Positional accuracy: ±4.572mm (maximum error)
    - Touch activation force: <113g (typically)
    - Controller resolution: 4096x4096 touch points
    - Light transmission: 80±5% (at 550nm wavelength)
    - Lifetime: $35x10^6$ touches in one location

- **Technology: Projected Capacitive**
    - Positional accuracy: ±3.0 mm
    - Multi-touch: 5 fingers
    - Light transmission: min: 87% minimal, 89% typical
    - Lifetime: 50×10^6 touches (with finger)

AUDIO SECTION (INTERCOM)

- **Loudspeakers (Left and Right)**
    - Type: dynamic
    - Rated power: 5W (8W max)

- **Goose-neck Microphone**
    - Type: electret condenser, unidirectional
    - Max input: 120dB SPL

- **Audio Amplifiers**
  - Designed to meet wide-band IP telephony standards
  - Frequency pass-band: (100Hz- 8kHz)TYP
  - Output power: 2 x 8W

- **USB Audio Codecs**
  - Model: Texas Instruments PCM2902C (Codec A) & PCM2900C (Codec B)
  - USB Interface: full-speed, USB 2.0 compliant, certified by USB-IF
  - Resolution: 16-bit Delta-Sigma ADC and DAC
  - Sampling rates (ADC): 8, 11.025, 16, 22.05, 32, 44.1, 48 kHz
  - Sampling rates (DAC): 32, 44.1, 48 kHz
  - Recommended data format: **16-bit** (rather than 8-bit), **stereo** (rather than mono)

MECHANICAL KEYS

- **Push To Talk Key** (two key-switches in parallel) **and 16 Line Keys**
  - Model: Cherry MX
  - Key travel: 3.6mm to 4.0mm total, (2±0.6)mm pretravel
  - Actuating force: (60±20)cN
  - Reliability (Mean Cycles To Failure): MCTF=1 billion (10^9) press/release cycles (50 million is guaranteed minimum)
- **Keycaps of Line Keys** (user replacable)
  - Construction: separate body and cover
  - Size: single (by default) or double (as an option)
  - Keycap bodies (with cut-out for LED): CN15 black color
  - Keycap covers: transparent
  - Key legends: pictograms printed on a transparent paper, underneath keycap covers
- **Control Keys**
  - Model: Diptronic DTS
  - key travel (typical): 0.3mm
  - Actuating force (typical): 255cN
  - Lifetime (minimal): 0.5 million operations

B. INTEGRAL PARTS AND FUNCTIONALITY

BeFREE 22 represents an integration of a touchmonitor (display with touchscreen), a computer, an intercom and a controller.

Figure 2 - Operator Interface of BeFREE 22

B.1 Operator Interface

The **Stripe** (see Figure 3 below) is an ergonomically designed horizontal area along the top side of the display. It comprises a number of visual indicators and mechanical keys (short-travel) to provide the operator with a quick insight and immediate access to important controls.

The **Line Keys** (see Figure 4) are mechanical keys (long-travel) aligned below the display. Each of 16 Line Keys incorporates a three-color (red, green and orange) LED indicator which can be controlled from the application software via the HID API. Key contents are programmable. Using double keycaps (8 of them are supplied with the product, along with the associated instructions on how to replace them) the Line Keys can be reconfigured into 8 double keys or a combination of single and double keys as per user preferences. Key legends (F1-F16) are printed on a transparent paper to allow the LED light to get through. Users can make their own paper legends and apply them instead.

The most prominent position is assigned to the **PTT Key**, which consists of two long-travel mechanical key-switches and a large actuator with dimmable background illumination.

Power	Blue	Short blink: OFF (power saving mode) Long blink: SLEEP (standby) Continuous: ACTIVE (operating)
Disk	Blue	Blinking indicates read/write activity of SSD
Touchscreen	Red	Illuminated when touchscreen is disabled
Warning	Red	Illuminated when an error has been detected

Brightness DOWN Key	Press to decrease brightness of the display and all visual indicators.
Brightness UP Key	Press to increase brightness of the display and all visual indicators.
Home / Touch Disable Key	Long press disables touchscreen. Short press (re)enables touchscreen.
Volume DOWN Key	Press to decrease volume of left and right speakers.
Volume UP Key	Press to increase volume of left and right speakers.

Bar-Graph Displays	Green: loudspeakers volume level Red: VU-meter (actual signal level at the loudspeakers and the microphone) Orange: display brightness level

Microphone LED	Illuminated (red) while the microphone is active (enabled).

Figure 3 - Top Stripe (Keys & Indicators)

16 x Line Key with LED	Programmable key with integrated three-color (red/green/orange) LED LED operation (Off / On / Blink / Alternate) can be pre-programmed by ChangeMe or dynamically controlled by HID API.
PTT (Push To Talk) Key	By default PTT, but can be set to PTM (Push To Mute) or any other key event. Blue backlight can be programmed to blink or turn ON/OFF upon press/release.

Figure 4 - Line Keys and PTT Key

B.2 Touchmonitor

The touchmonitor comprises a high-brightness, ultra-wide viewing angle TFT LCD and a touchscreen. The display is connected to the embedded computer via LVDS interface. The touchscreen is operated by the respective controller with USB interface to the embedded computer.
The brightness of the LCD and all visual indicators on the Stripe (Bar-Graph Displays, LED Indicators and PTT Key backlight) is adjustable by Brightness UP and DOWN keys. Home/TouchDisable key can be used to temporarily disable touchscreen for cleaning purposes.

B.3 Embedded Computer

BeFREE 22 incorporates an industrial grade single-board computer, which operates the embedded touchmonitor and provides for an extensive connectivity to enable various external peripherals to be used along (see Chapter B.3 for more details). It is internally connected to the Tipro Controller (via USB and COM2) as well as with the Audio Section/Subsystem (via USB and Analog Line-In/Line-Out signals).
The computer is based on an Intel® Processor, what enables a wide-range of operating systems to be applied. A solid state disk is used as a mass storage device. The heat generated by integrated circuits is transferred via a heat-pipe to an internal heat-sink, without a fan. As a result the BeFREE 22 is completely silent in operation, without moving parts.

B.4 Intercom (Audio Section)

The functional block diagram of the audio section is shown in Figure 5 below.
Internal signal processing includes analog-to-digital and digital-to-analog conversion (block “USB AUDIO CODEC” which comprises two USB Codec chips), conditioning (amplification, attenuation, filtering …), sensing and switching. The complete processing is programmable via ChangeMe software and can be dynamically modified during the operation in so-called On-Line operating mode (using HID API). USB and analog signals can be mixed, resulting in up to eight listening/output audio channels (4 stereo signals) and four parallel recording/input channels (USB and analog). The Echo-Cancellation circuitry is optional (see Chapter D.3 for more details).

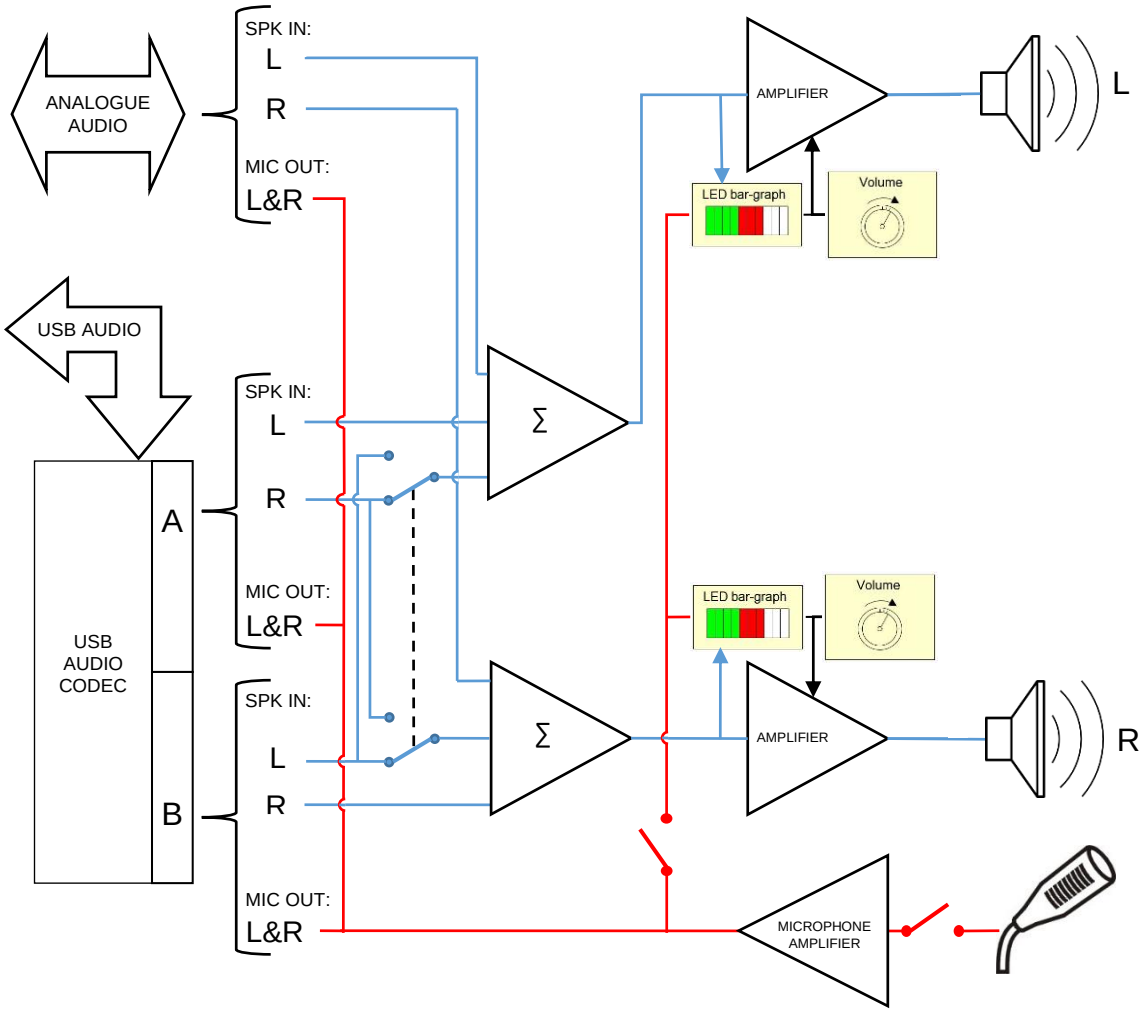

Figure 5 - Audio Section (intercom)

Analog audio signals to and from the Intercom can be connected to the analog sound card of the embedded computer or alternatively to the externally available connectors (see Chapter B.5 for more details). The connection diagram is shown in Figure 6 below. The analog sound card can be completely disconnected from the Intercom section and made available for external analog audio devices via connectors on the connector plate shown in Figure 7.

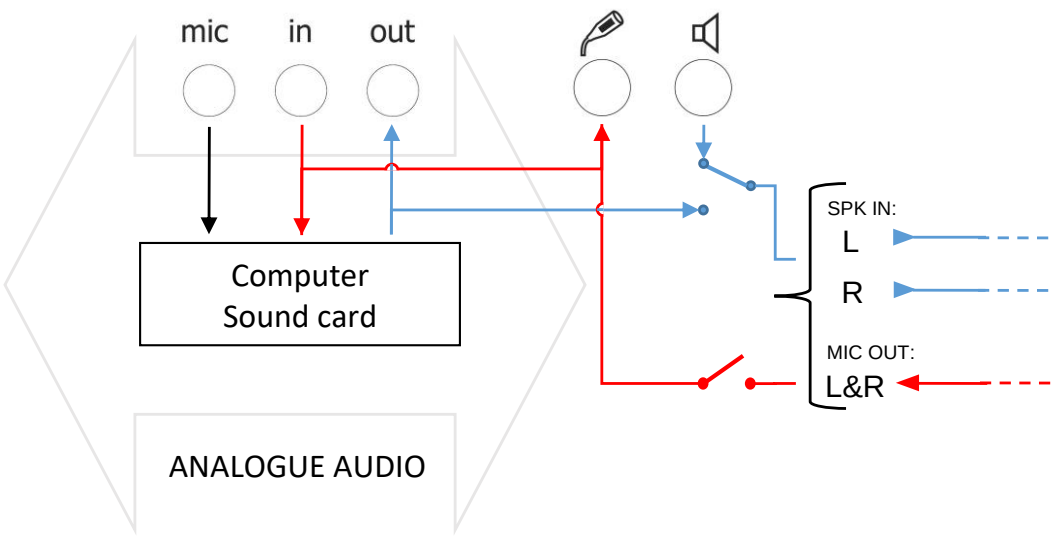

Figure 6 - Analog Audio Detail

Microphone Amplifier

This is a logarithmic audio amplifier with programmable gain, noise gating threshold and compression ratio. Noise gating feature enables ambient noise to be suppressed. All sounds below the threshold are removed inside the amplifier, so with higher threshold the microphone needs to be used closer to the mouth and speech needs to be louder to get through the amplifier. The compression feature enables compression of the output signal dynamics in order to minimize the difference between soft/low and loud speech. The amplifier is also capable of limiting extremely loud speech thus preventing distortion and popping. The overall gain can be even lower than one (i.e. attenuation) as well as equal to zero (i.e. totally muted input). Also the range of the goose-neck microphone can be adjusted.
A linear regime of the amplifier is a special option which might be activated in full-duplex operation where acoustic echo is to be cancelled using application software (rather than optionally integrated hardware echo-canceller – see Chapter D.3).

Left and Right Speaker Amplifier

A stereo D-class amplifier is driving both speakers (Left and Right Speaker in Figure 5). The gain of each speaker (i.e. volume level of the respective speaker) can be adjusted by the user in normal operation via the respective incremental encoder at the respective side of the module (Left and Right Encoder in Figure 2). The selected level is immediately displayed at the respective bar-graph display in green color (20 volume levels + mute). The amplifier can deliver up to 8W of electric power to each speaker.

By default, the left speaker is driven by the sum of left output of USB Codec A and left output of USB Codec B, while the right speaker is driven by the sum of right output of Codec A and right output of Codec B (so-called **Stereo Mode**). Alternatively, each Codec can drive its own speaker, i.e. Codec A to left speaker, Codec B to right speaker (so-called **Mono Mode**). In either of the modes the analog Line Out signals from the computer sound card can be optionally added to the summing amplifiers, Line Out Left to left amplifier, Line Out Right to right amplifier.

Bar-Graph Displays

Each of the two bar-graph displays comprises 10 three-color (red, green and orange) LEDs. By default they constantly operate as VU meters in red color, showing actual levels of the respective speaker signals and the level of the microphone signal. Optionally, the microphone signal can be disconnected from the VU meters.

If a rotation of an incremental encoder has been detected the respective bar-graph automatically displays the gain of the respective amplifier in green color. Volume UP and DOWN keys can also be used to adjust the current volume settings, but simultaneously for both speakers.

If a press of Brightness UP or DOWN key has been detected both bar-graphs simultaneously display the current brightness setting of the LCD and all visual indicators in orange color.

Incremental Encoders

These (Left and Right Encoder in Figure 2) are endless digital potentiometers used for immediate volume control of the Left and the Right Speaker respectively. Each has 24 detents per revolution. Every single detent changes the volume for one step up or down, but only every second one is represented by one LED in the corresponding Bar-Graph display in green color.

Optionally, any of the encoders can change the volume for both speakers (programmable by ChangeMe software)

It is possible to program events for encoder operation (e.g. synchronisation with software).

B.5 External Connectors

Numerous connections for external devices are available at the Connector Plate (see Figure 7) from underneath the module. Most of them are standard interfaces (USB, LAN, COM, Display …) intended for users to apply freely.

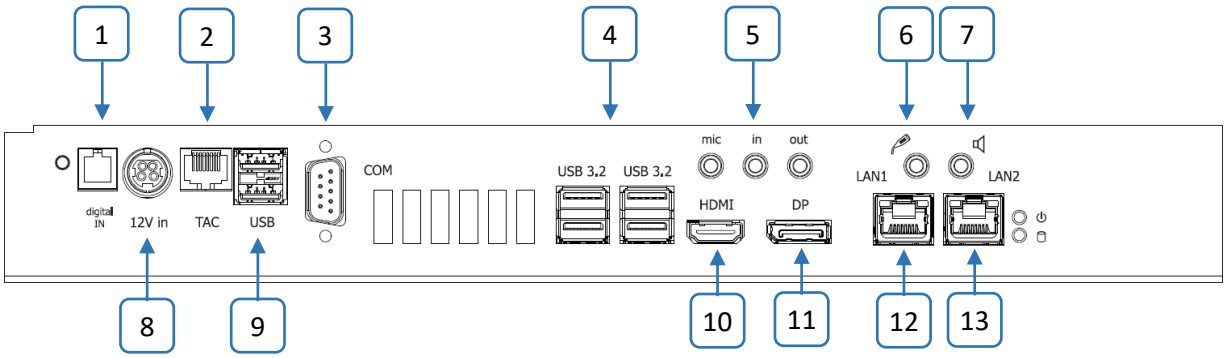

#	Designator	Type	Note
1	Digital Input	RJ 4P/4C socket	see External Digital Inputs below
2	TAC	RJ 8P/8C (RJ 45)	Connection to Tipro Analog Handset
3	COM 1	DSUB-9 male	RS232 serial port
4	USB 3.2	4 x USB A	4 x USB3.2 Gen2 (10Gbps)
5	Mic-In	Stereo jack 3.5 mm	input to analog sound card
	Line-In	Stereo jack 3.5 mm	input to analog sound card
	Line-Out	Stereo jack 3.5 mm	output from analog sound card
6	Intercom Line-Out	Stereo jack 3.5 mm	microphone amplifier output
7	Intercom Line-In	Stereo jack 3.5 mm	loudspeaker amplifier input
8	12V Input	Mini Power DIN	reserved
9	Dual USB	2 × USB type – A	full-speed, 500 mA (Tipro USB devices)
10	HDMI	HDMI 2.0	For external display
11	DP	DP1.4a	For external display
12	LAN 1	RJ 8P/8C (RJ 45)	1 Gb Ethernet
13	LAN 2	RJ 8P/8C (RJ 45)	1 Gb Ethernet

Figure 7 - Connector Plate

External Digital Inputs

Two inputs (refer to Figure 8 for the connector and signal description) are provided for detection of external digital (ON/OFF) signals to be transformed into programmable key events, equivalent to, for instance, PushToTalk key on the Stripe. Typical device to be connected to is an external PushToTalk switch/pedal.

One of the inputs (A) is galvanically isolated (via opto-coupler) and is therefore intended for an external ground-referenced signal, such as a digital output of another electronic device. The other input (B) is to be used for an external "floating" signal, such as contacts of a mechanical/magnetic key/switch (see Figure 9).

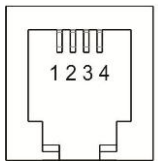

Pin #	Signal
1	A– (GND)
2	A+ (RxD)
3	B+ (TxD)
4	B– (GND)

Figure 8 - Digital Inputs Connector

Port	Internal circuitry	Suggested external circuitry
A	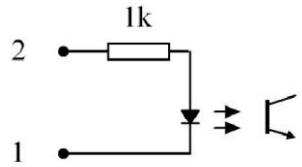	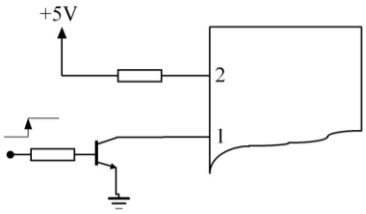
B	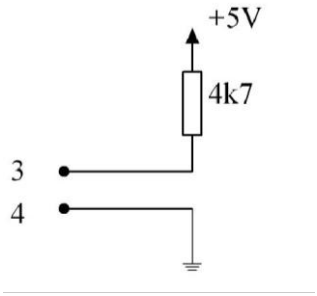	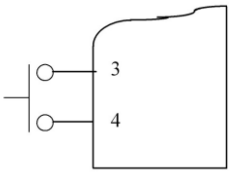 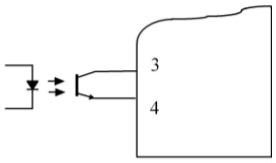

Figure 9 - Applying Digital Inputs

These inputs have an alternative function (direct access to the Tipro controller from an external computer via serial RS232 port, as per Figure 8 above) which is intended for installation and maintenance purposes. More details can be found in the Chapter C.1 as well as in the Reference [10].

External Analog Inputs and Outputs

Mic-In, Line-In and Line-Out are standard PC audio inputs/outputs available at 3.5mm stereo jacks for external audio devices, such as headsets, active loudspeakers or microphones. In this case the internal analog sound card should be disconnected from the Intercom section via ChangeMe software (see Figure 6 for more details).

Intercom Line-Out signal is actually the output of the internal microphone amplifier at the standard line level (0dBu) which can be connected to an external recording device, for instance. Its output impedance is 10kΩ in series with 1µF.

Intercom Line-In signal is an auxiliary stereo analog input to the internal speaker amplifiers. Expected signal level is 0dBu. Its input impedance is 100kΩ in series with 0.1µF.

C. OPERATION

C.1 Configuring BeFREE 22

The BeFREE 22 is a rather complex device with a number of programmable settings/parameters provided for users to configure in accordance to the particular application. To enable that feature Tipro supplies the respective programming utility (ChangeMe) which operates only under Windows operating systems. (for Linux an updating software tool is available – see reference [11]) It assists users to define own set of parameters, save them into a file (for possible replication in the future) and program into non-volatile memory of the Tipro controller for permanent storage.
It is also possible to dynamically modify certain settings (e.g. display brightness, LED indicators, touchscreen disable/enable for cleaning purposes …) from the application software. For that purpose Tipro provides the respective Application Programming Interface (API); **Tipro HID API** for Windows and **Tipro Linux API** for Linux and the associated documentation (reference [6]).

BeFREE 22 can be programmed/configured externally, from another computer. That computer needs to operate under Windows with ChangeMe utility installed and have one serial COM port available. The BeFREE 22 may operate under any operating system or not have it installed at all. This feature is obviously useful in cases when the BeFREE 22 runs a non-Windows operating system, but it is also applicable in all Windows cases where ChangeMe utility is not installed (e.g. to prevent uncontrolled modifications of the settings). The cable required for programming can be ordered from Tipro (Ordering Code TM-CGR) or rather easily made. Reference [10] describes the procedure in detail.

C.2 Applying BeFREE 22

The BeFREE 22 is typically used together with other FREE add-on modules, combined in various compositions/configurations. An example with Handset modules is shown in Figure 10 below, along with its schematic representation in Figure 11.

Figure 10 - Example BeFREE 22 Configuration

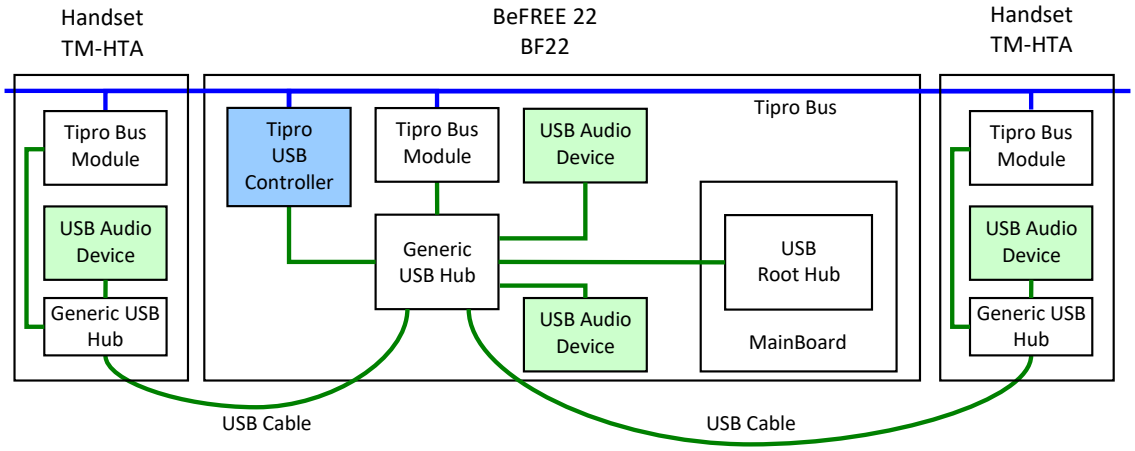

Figure 11 - Example BeFREE 22 Configuration – Schematic Representation

D. OPTIONS

D.1 Inclination Mechanism

BeFREE 22 can be fitted with an Inclination Mechanism (also referred to as Angle Adjustment Mechanism). Normally, the display surface of BeFREE 22 is inclined for 150 against the horizontal plane. The mechanism enables gradual adjustment of the angle from approximately 30^0 to 70^0.

Figure 12 - BeFREE 22 with Inclination Mechanism (VESA 75)

D.2 HID Telephony Interface

The actual status (pressed/released) of the PTT key and Line Keys is normally reported as a programmable sequence of keystrokes generated by a standard USB keyboard, this way emulating a generic HID Keyboard Device. An example of the application can be found in the Reference [8] ("Hook and PTT in Software").

Additionally or alternatively, the PTT and Line Keys status can be reported via HID Telephony Interface, which is an integral part of the BeFREE 22. See reference [9] ("HID Telephony Interface") for more details.

D.3 Echo-Cancellation Circuitry

Acoustic echo is a physical phenomenon inherent to hands-free devices (such as Intercom) in full-duplex mode, so it needs to be suppressed and/or cancelled. This is normally implemented in the application software through the specific signal processing routines. Alternatively, it can be achieved in the hardware using a digital signal processor. Basic properties of the optional (see Chapter E.1 for details on the respective Ordering Code) Echo-Cancellation circuitry are listed below.

- Performance: full-duplex
- Sampling rate: 16kHz
- Acoustic echo-cancellation: up to 40dB
- Acoustic echo suppression
- Background noise reduction

The reference signal for the echo-canceller is the sum of signals at the left and the right speaker. Optionally, the reference might be taken from either of the speakers.

D.4 Goose-Neck Microphone

By default, the goose-neck microphone is an integral part of the BeFREE 22, but it can be optionally omitted. See Chapter E.1 for details on the respective Ordering Code.

D.5 Without Line_keys

By default, 16 programmable Line-Keys or shortcut keys are integrated under the display.
As an option, these can be removed.

E. ORDERING CODES

E.1 BeFREE 22

1	2	3	4	5	6	7	8	8	9
BF	**22**	**-**	**J**	**E**	**8**	**-**	**P**	**U**	**0**	**-**	**C15C25**	**-**	**xxx**

1 – Module Type

BF – **B**e**F**REE (touchcomputer) module

2 – Model

22 : Integrated Intercom, 15.6” LCD

3 – Processor Family

J : Intel® Quad Core Celeron®

4 – CPU Version

E : J6412 2.0 GHz

5 - RAM

8 : 8 GB RAM

6 : 16 GB RAM

3 : 32 GB RAM

6 – Touchscreen Technology

R : ELO **R**esistive

P : **P**rojected Capacitive (multi-touch)

7 – Integrated Intercom Option

U : **U**SB Intercom functionality
C : USB Intercom functionality with Echo-**C**ancellation Circuitry
V : USB Intercom functionality without goose-neck microphone

8 – Hardware Options

0 : none

B : without Line-Keys

9 – Housing Color (optional)

C15 : black (C15) with black matte (C25) top part of the housing
This part of the code is not mandatory if the color is C15C25, what is a default.

10 – Custom Version

Three-digit number reserved for product modifications. It is omitted in case of standard version.

Note 1:

BeFREE 22 requires 12VDC power supply to operate (see Chapter A.2). The respective AC/DC adapter is included in the packaging, along with the EU power cord.

E.2 Inclination Mechanism

		1	2	3		4		5
TM	**-**	**S**	**U**	**A**	**-**	**C15**	**-**	**xxx**

1 – Accessory Type

S – Mechanical **S**upport mechanism (Inclination Mechanism)

2 – Mechanism Type

U : **U**niversal

3 – Adapter Type

A : **A**ll BeFREEs

4 – Color

C15 : black
This part of the code is not mandatory if the color is C15, what is a default.

5 – Custom Version

Three-digit number reserved for product customizations. It is omitted in case of standard version.

F. REFERENCES

1. "BeFREE20" – Technical Overview
2. "BeFREE10" – Technical Overview
3. "HANDSET" – Technical Overview
4. "SPEAKERBOX" – Technical Overview
5. "ChangeMe" – User's Manual
6. "HID API" - Reference Manual
7. "Modularity Demystified" – "Dispatching Hints & Tips" White Paper – Issue No. 001
8. "Hook & PTT in Software" – "Dispatching Hints & Tips" White Paper – Issue No. 004
9. "HID Telephony Interface" – "Dispatching Hints & Tips" White Paper – Issue No. 005
10. "BeFREE10/20/22 External Programming" – "Dispatching Hints & Tips" - Issue No. 006
11. "Tiprowrite - Program settings and key contents into Tipro devices on Linux OS"
12. "Cleaning / Disinfecting guidance"

G. NOTICES

G.1 Disclaimer

Information furnished by Tipro is believed to be accurate and reliable. However, Tipro makes no representations or warranties regarding the accuracy or completeness of the contents of this document and reserves the right to make changes to specifications and product descriptions at any time without notice.

G.2 Copyright Notice

©2017-2025 Tipro. All rights reserved. Trademarks and registered trademarks are the property of their respective owners.